2AMW35U4RRA
2AMW42U4RRA

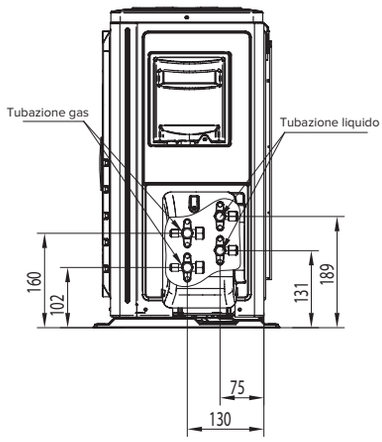

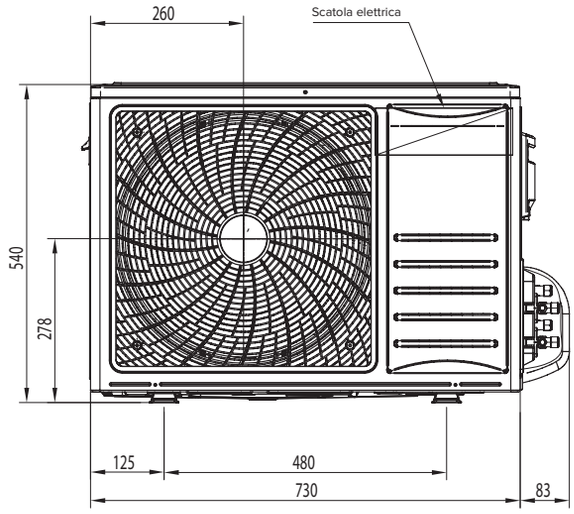

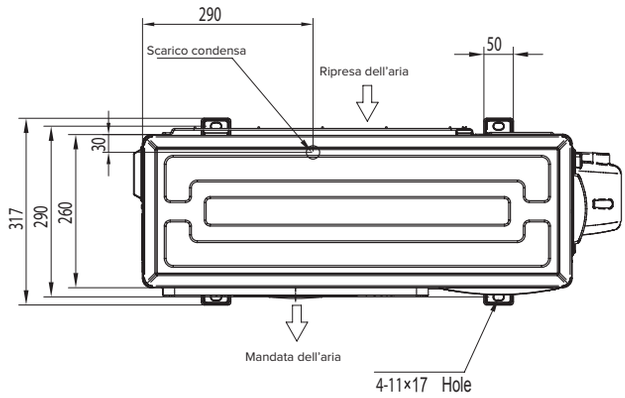

2AMW50U4RXA

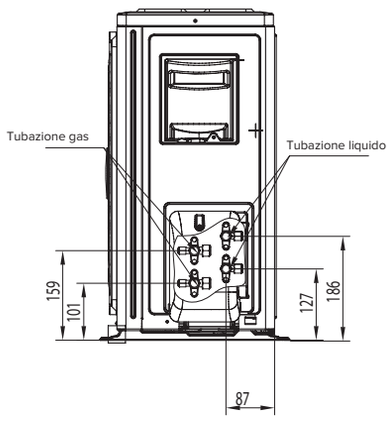

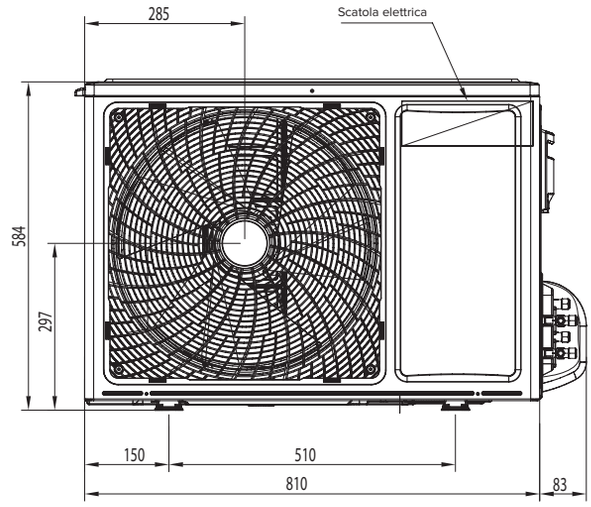

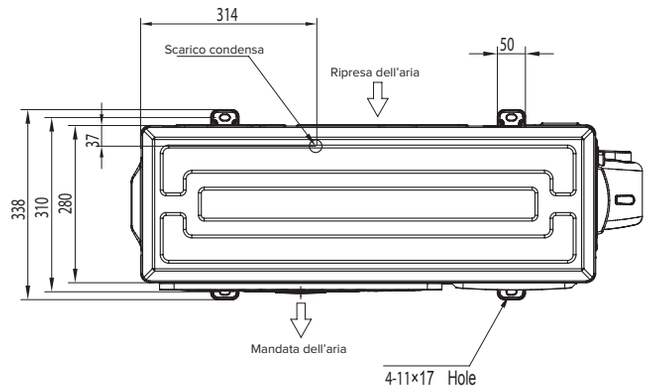

3AMW62U4RFA
3AMW72U4RFA

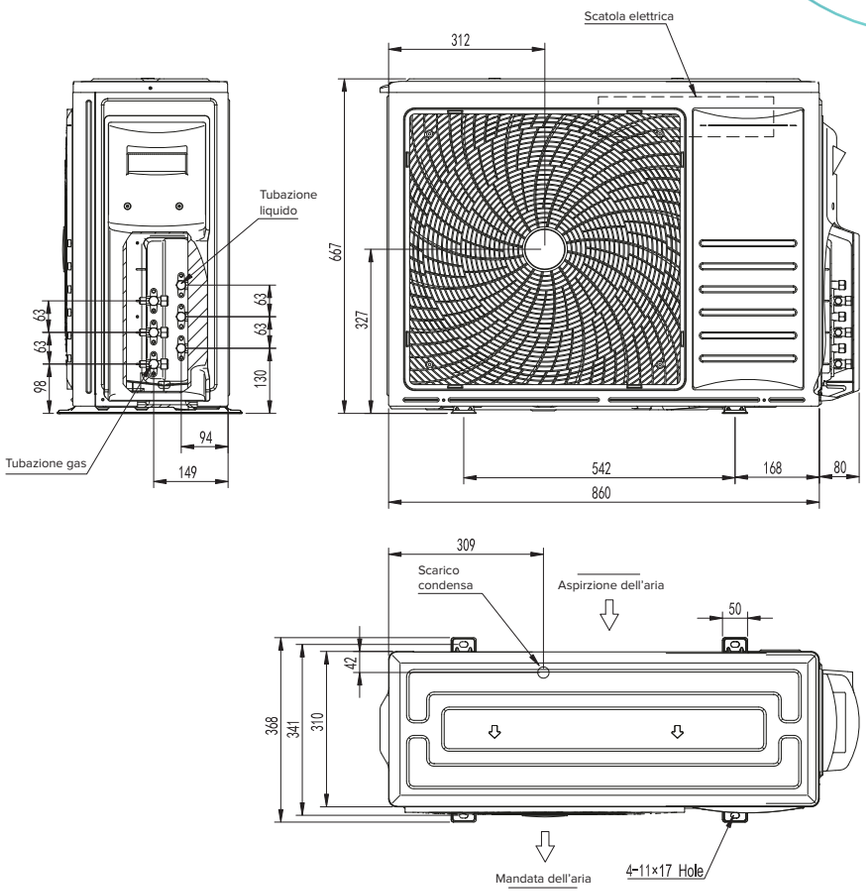

4AMW81U4RAA
4AMW105U4RAA

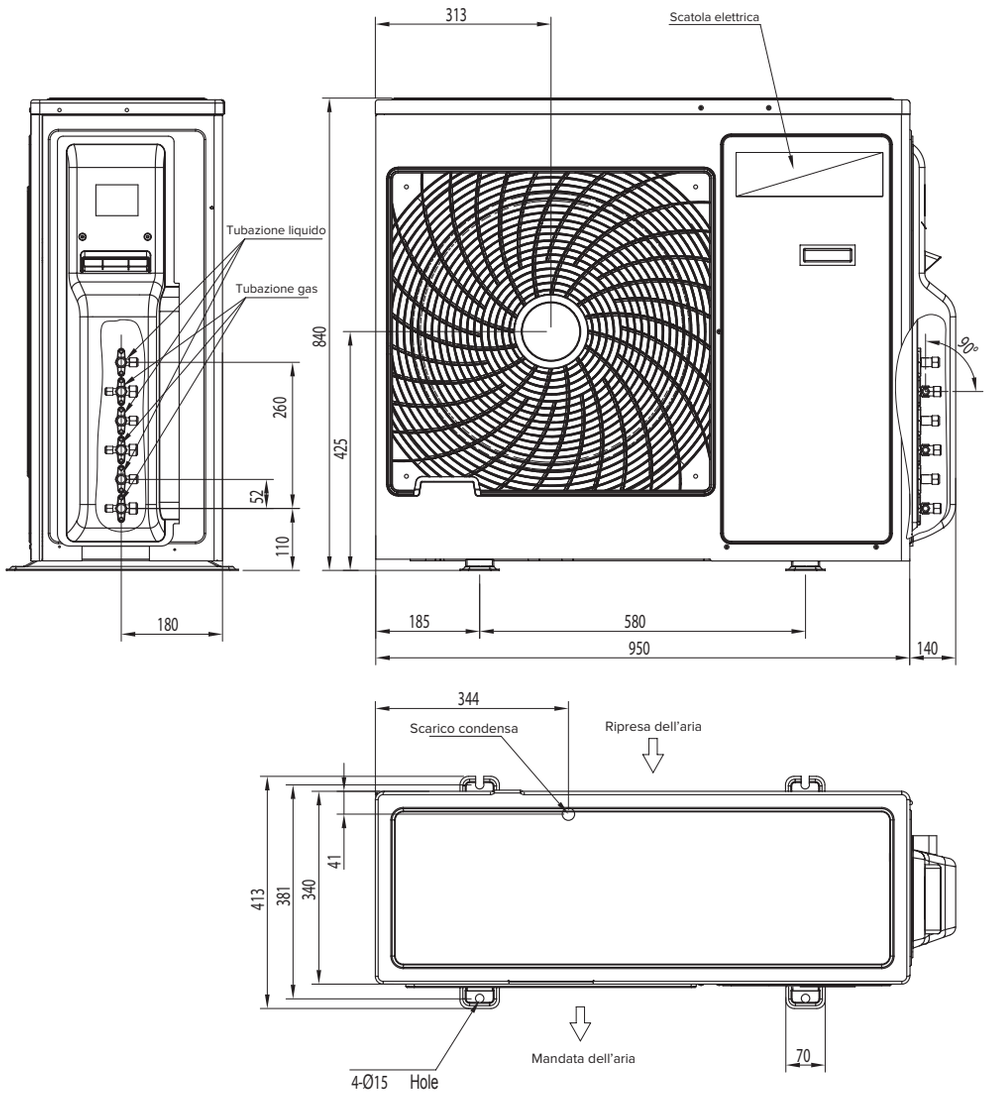
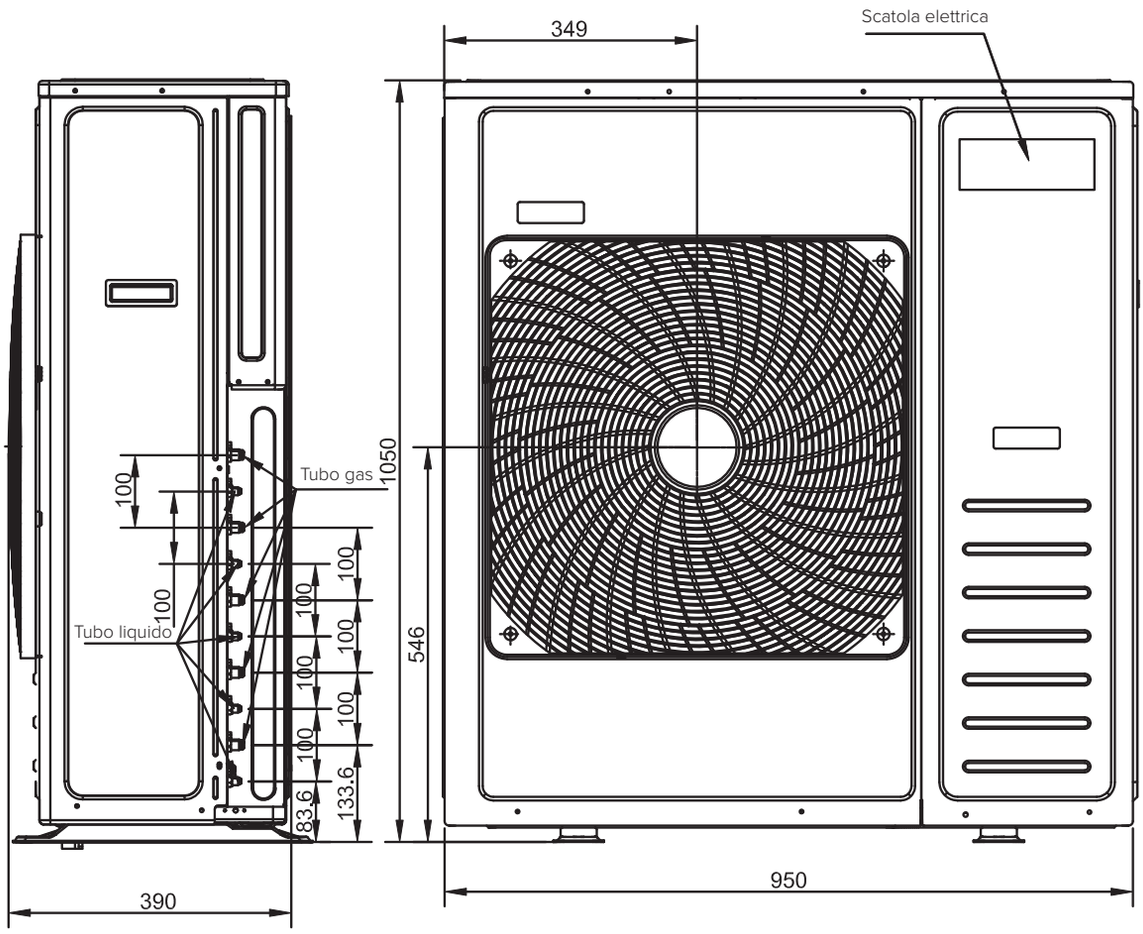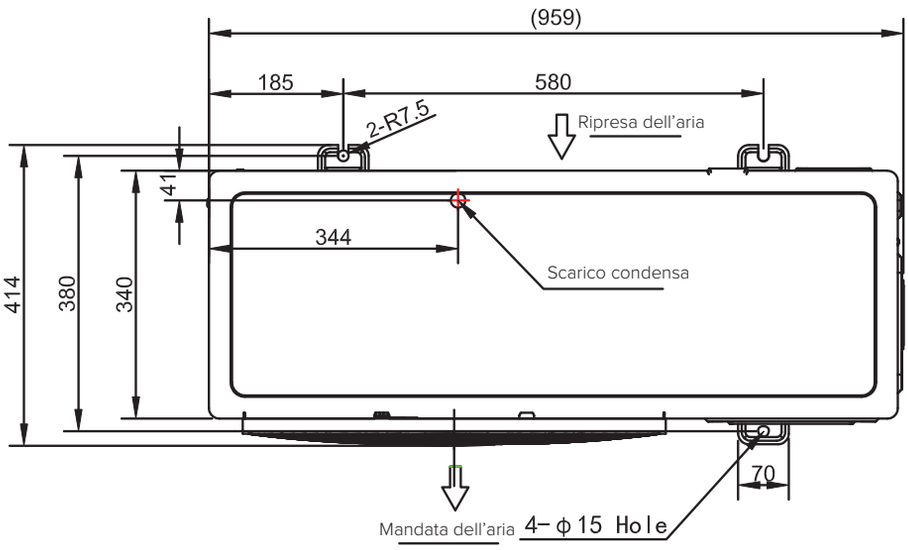
5AMW125U4RTA